FREUDENBERG
INNOVATING TOGETHER

Diaphragm Accumulator | 75 - 1315 - 63 - 611 | 0,75 L - 250/0 BAR ESC_VOL_IMP | 123,6 X 176 MM ESC_IN | Steel /Membrane / Bladder- NBR | CE / PED

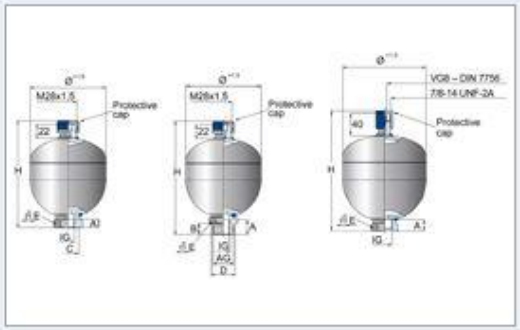

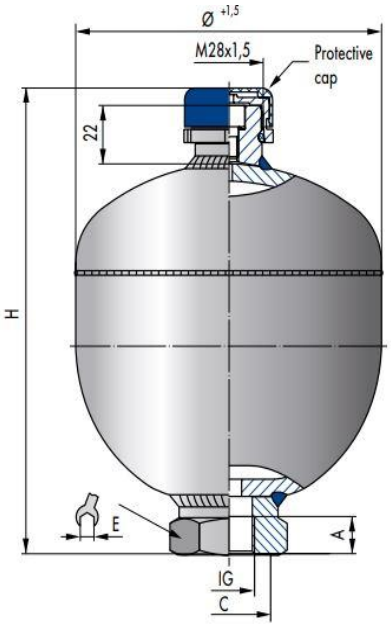

item no.	37005721
availability	on demand
IG	G 1/2
AG	none
gas port	Standard EU M28x1,5
A	14
certificate	CE / PED
E	WS 41
outer Ø	123.6 mm
H	176 mm
material	NBR

Item attributes 37005721 (Accumulator Diaphragm Accumulator)

design	DACC	**temperature max. (temp. max.)**	80 ° C
brand	Freudenberg	**oil port wrench size (E)**	WS 41
country of origin	DE	**outer diameter (outer Ø)**	123.6 mm
inner thread oil side (IG)	G 1/2	**height (H)**	176 mm
outer thread oil side (AG)	none	**shore hardness**	
gas port (gas port)	Standard EU M28x1,5	**material**	NBR
IG insertion depth oil side (A)	14	**packaging unit**	1 pcs.
temperature min. (temp. min.)	-20 ° C	**net weight**	2950 gr.