145 mm (5,7”) DIAMETER LOW VOLTAGE

CODE 497.3.267 & 265

RoHS

Special sealing system used on floor care was designed to protect a bearing against an influence of polluted air and moisture (497.3.267). For applications in floor care we have developed a water proofed sealing between blower and motor parts. Blowers could be also antistatic and anticorrosion protected and are available in one-, two- or three-stage configuration.
Intelligent drive is adapted to regenerate air supply of fuel cells. In addition to that also all main technical features are the same like in other blowers (blocked rotor protection, thermal protection, soft start, etc.).

Possible applications

- scrubbers
- extractors
- battery operating equipment
- air supply of fuel cells
- portable vacuum cleaners
- etc.

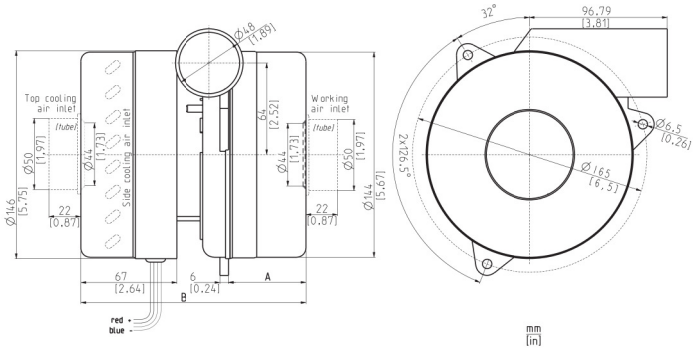

Dimensional and performance data are subject to change without notice.

There are plenty of options for each blower available (some are up on request):

- top cooling air inlet with tube
- working air inlet with tube
- working air inlet
- side cooling air inlet
- top cooling air inlet
- speed control 0-10VDC or PWM
- without speed control

Selection and ordering information for low voltage 24, 36 and 52 V DC - TANGENTIAL DISCHARGE												
Code	Curve	A		B		P1	Volt	Sealed Vacuum		Max. air flow		Mass
		[mm]	[in]	[mm]	[in]	[W]	[V]	[kPa]	[inH$_2$O]	[l/s]	[CFM]	[kg]
497.3.267-10	1E36	37	1,42	141	5,55	950	36	14	56,26	55,70	118,02	2,1
497.3.267-8	2E36	62	2,13	166	6,54	1000	36	20,5	82,38	47,22	100,05	2,21
497.3.267-7	2E24	62	2,13	166	6,54	700	24	15,21	53,85	42,77	90,62	2,21
497.3.265-851	3P36	81	3,19	185	7,28	1000	36	25,4	102,07	38,88	82,38	2,5
497.3.265-853	3P52	81	3,19	185	7,28	1200	52	26,9	108,10	42,78	90,65	2,5

Data above represent the performance of an average motor sample. Individual data may vary due to normal manufacturing variations.

TANGENTIAL DISCHARGE
24V DC, 36V DC, 52V DC

FROM 450W to 1200W

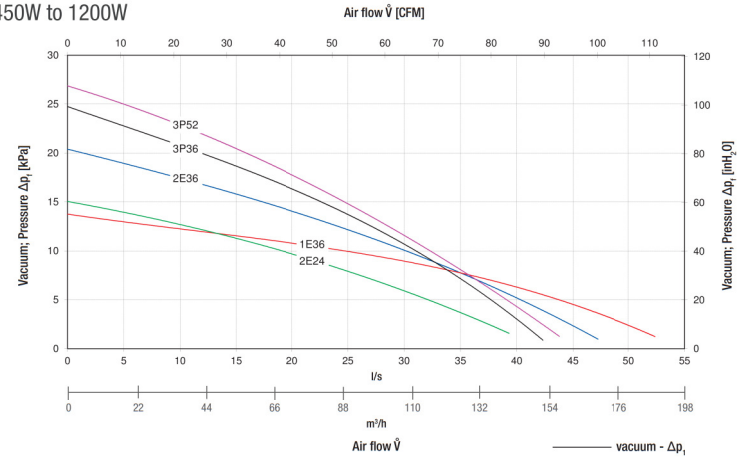

Note: Also some other types available for usage at various DC voltages. Please contact us for more details.